WALL TYPE INDICATOR POST

KVS - 7781

SPECIFICATION

- Upload the upper cover of control lead
- Measure control lead depth, remove the excess part of the connector lead and driving rod
- Fit the control rod with full closed valve, turn the position plate to SHUT position
- Load upper cover

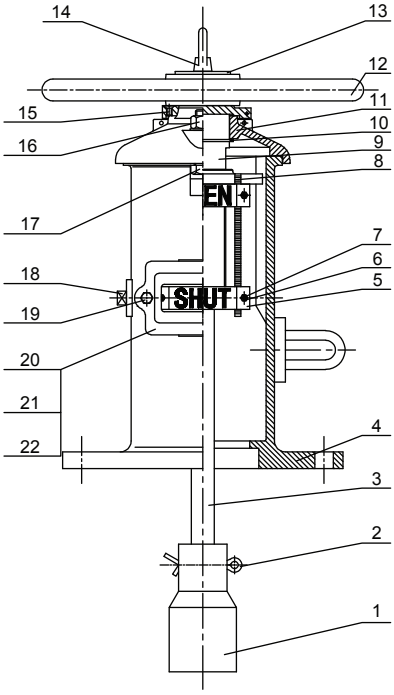

MATERIALS SPECIFICATIONS

No.	PART NAME	MATERIAL	REMARK
1	Joint	CI	ASTM A126
2	Cotter Pin	1035	ASTM A29
3	Driveing Rod	1045	ASTM A29
4	Main Body	CI	ASTM A126
5	Indicator Plate	A413.0	ASTM S12A
6	Nut, Gasket	1035	ASTM A29
7	Stud Bolt	1035	ASTM A29
8	Position Bracket	S.S.304	ASTM A276
9	Driver	S.S.304	ASTM A276
10	Retainer Ring For Stem	1566	ASTM A29
11	Upper Cover	CI	ASTM A126
12	Handwheel	CI	ASTM A126
13	Gasket	A283 Gr.C	ASTM A36
14	Lift Ring	1035	ASTM A29
15	Screw	1035	ASTM A29
16	Nut	1035	ASTM A29
17	Bolt	1035	ASTM A29
18	Screwed Plug	1035	ASTM A29
19	Bolt Flat Gasket	S.S.304	ASTM A276
20	Keyhole Plate	A283 Gr.C	ASTM A36
21	Keyhole	Organic Glass	-
22	Keyhole Plate Gasket	EPDM	ASTM D2000

*All dimensions are nominal. Actual dimensions may vary.